ROADMASTER

Quality Towing Systems Since 1974

Owner's Manual

THIS MANUAL MUST BE READ COMPLETELY BY OWNER

ROADMASTER, INC.

Welcome to the ROADMASTER family!

This manual has been prepared to acquaint you with the operation, care and maintenance of your tow bar, and to provide you with important safety information.

Read your owner's manual cover to cover. Understand how to install and operate your tow bar, and carefully follow the instructions and safety precautions.

As is the case with most precision equipment, frequent cleaning and care results in better performance and longevity. Inspect your tow bar, mounting brackets and other towing system components on a regular basis. Keep your tow bar clean and well-lubricated – follow the instructions in this manual.

Safety cables are required by law in most states. Follow our safety cable installation instructions in this manual.

Your tow bar has a one-year limited warranty. **To qualify for your warranty**, fill out and return the enclosed product registration card within 30 days of purchase. As a bonus, we'll extend your warranty to a total of two years at no additional cost, if we receive the product registration card within 20 days of purchase.

We thank you for your patronage and greatly appreciate your discerning taste.

IMPORTANT NOTICE!

Safety Definitions

Statements in this manual followed by the following words are of special significance:

⚠ WARNING

WARNING indicates a potentially hazardous situation which, if not avoided, could result in property damage, serious personal injury, or even death.

⚠ CAUTION

CAUTION indicates a potentially hazardous situation which, if not avoided, may result in property damage, or minor or moderate personal injury.

FREE EXTENDED WARRANTY

You must accurately and completely fill out and mail the product registration card within thirty (30) days from the date of purchase to qualify for your warranty. **If we receive your card, completely and accurately filled out, within twenty (20) days from the date of purchase, we will extend the coverage to a total of TWO (2) years at no extra charge.**

Your product registration is an important record for ROADMASTER to keep in touch with you. It also enables us to expedite any future claim, update or recall that may arise concerning our products.

IMPORTANT

Fill out, tear off and mail within 30 days of purchase to qualify for your warranty. To receive your free one-year extension, mail so that we receive it within 20 days of purchase.

WARRANTY PROCEDURES

For warranty service, see the ROADMASTER Limited Warranty for details.

CAN'T LOCATE YOUR TOW BAR SERIAL NUMBER?

YOUR TOW BAR SERIAL NUMBER IS ON A LABEL. YOU WILL NEED THIS NUMBER WHEN YOU FILL OUT YOUR TOW BAR WARRANTY INFORMATION.

Write down the serial number in the space below and retain for future reference...

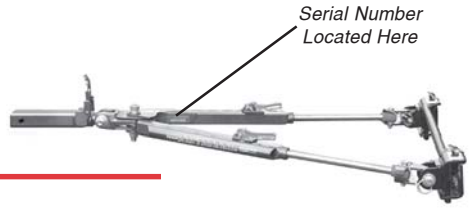

SERIAL NUMBER _____

ROADMASTER

FREE BONUS

OWNER *MUSTS* FOR TOWING SAFETY

1. ***TOW BAR CONNECTION AT MOTORHOME AND TOWED VEHICLE MUST BE WITHIN THE 'SAFE ZONE.'***
   Towing with the tow bar at an upward or downward slope puts undue strain on the entire towing system. Do not tow if the tow bar is not within the 'Safe Zone' – no more than 3 inches above level or no more than 4 inches below level (See the section titled "Stay within the 'Safe Zone'" for further information.).
2. ***STEERING MUST BE UNLOCKED AND FREE TO TURN WHEN TOWING.***
   Failure to do so can result in severe tire and equipment damage. The steering wheel must be free to turn when towing. Check the manufacturer's specifications for the proper towing procedures.
3. ***DRIVER MUST NOT BACK UP MOTORHOME WITH VEHICLE ATTACHED.***
   Backing up with the towed vehicle attached easily causes the vehicle to "jackknife" and will damage the tow bar, mounting bracket, hitch, the towed vehicle's front end and/or the rear of the motorhome. This is the primary cause of tow bar damage and will void the warranty.
4. ***YOUR VEHICLE AND ALL ITS CONTENTS CANNOT EXCEED 8,000 LBS.***
   In addition, the receiver hitch and tow bar bracket safety cables (if required) must be rated at no less than the weight of the towed vehicle and all its contents.
   (The **BLACKHAWK** All Terrain non-binding tow bar is rated at a maximum of 8,000 lbs. carrying capacity; therefore ROADMASTER uses 8,000 lbs. as a standard for rating the weight capacity of all supplementary towing equipment, as well as the towed vehicle and all its contents, throughout this manual.)
5. ***THE OWNER MUST KEEP THE TOW BAR CLEAN AND WELL LUBRICATED.***
   As is the case with most precision equipment, frequent cleaning and care results in prolonged service. Details for cleaning and lubricating your **BLACKHAWK** All Terrain non-binding tow bar are outlined in the section titled "Care and Cleaning."
6. ***THE OWNER MUST INSPECT ALL MOUNTS, BRACKETS AND FASTENERS.***
   Visual inspection of *ALL* bolts, wiring, cables and metal components each time before you tow will avoid problems on the road. Check your bracket every 3,000 miles. Inspect for any fractures or cracks in the steel or any visible damage. **Do not tow if damaged.** Check torque on all bolts. Refer to installation instructions for mounting brackets and tow bar for torque rating.
7. ***THE OWNER MUST FILL OUT AND MAIL THE PRODUCT REGISTRATION CARD.***
   It is IMPORTANT that you send in a completely filled out registration card as soon as possible. The information is needed in case we must contact you for updates, recalls and to verify your warranty.
8. ***THE OWNER MUST CHECK MANUFACTURER'S INSTRUCTIONS FOR TOWING.***
   Some vehicles require a transmission lube pump, axle disconnect, driveline disconnect or free-wheeling

continued on next page

Owner 'musts' for towing safety

continued from preceding page

hubs to tow without damaging the vehicle. Failure to properly equip the vehicle will result in severe damage to the transmission. Check the manufacturer's specifications for the proper procedure to prepare the vehicle for towing. Be sure your vehicle is towable before taking it on the road.

9. ***THE OWNER MUST NEVER TOW VEHICLE WITH A COMPARABLE WEIGHT VEHICLE.***
   The towed vehicle should never exceed 40% of the weight of the towing vehicle. Towing a vehicle equipped with a tow bar using a vehicle of similar weight will cause the rear vehicle to over-ride the front vehicle, resulting in "jackknifing," "leapfrogging," "fishtailing" or other unsafe towing situation. Serious damage to both vehicles and the towing system equipment could result.
10. ***ALWAYS STAND TO ONE SIDE AND AS CLOSE TO THE COACH AS POSSIBLE WHEN RELEASING THE TOW BAR LOCKING MECHANISM.***
    Never stand between the adjustable arms or put any part of your body between the adjustable arms when releasing the tow bar. Always stand to one side. Because the car may jerk forward when you release the locking mechanism, face the towed car and stand as close to the back of the coach as possible before you release the locking mechanism, to keep from being hit by the towed vehicle.
11. ***ALWAYS USE SAFETY CABLES OR CHAINS WHEN TOWING.***
    A frame-to-frame safety cable hookup is legal in *ALL* states that require them. Use only 8,000 lb. or heavier rated cables. In addition, check to ensure that your safety cables are the proper length. Refer to the three sections titled "Proper Installation of Safety Cables," "Connecting the Short Safety Cables," and "How to Use Safety Cables."
12. ***THE OWNER MUST CHECK MOTORHOME TURNING RADIUS.***
    Some motorhome chassis have such a tight turning radius that you can damage your motorhome, towed vehicle, or tow bar while turning too sharply. Before getting on the road with your towed vehicle, you should test your turning radius in an empty parking lot. With the towed vehicle attached, have someone watch you as you slowly turn sharply to see whether you have this potential problem. If you do, note how far you can safely turn the motorhome's steering wheel, and be sure not to turn it further when towing. Damage that results from turning too sharply is not covered by warranty.
13. ***THE OWNER MUST NEVER USE TOW BAR WHILE TOWING MORE THAN ONE VEHICLE/TRAILER.***
    In some states it is legal to have one vehicle towing more than one trailer (for example a truck towing a trailer that is towing a boat). Do not tow more than one vehicle/trailer when using a tow bar or non-warranty damage or injury may result.

WARNING	**Failure to follow these instructions may result in property damage, personal injury or even death.**

INSTALLER *MUSTS* FOR SAFETY

The following *"safety musts"* are provided to your installer with the installation instructions for the **BLACKHAWK** All Terrain non-binding tow bar. They are repeated here for your information.

As a precautionary measure, verify that you or the installer have followed all safety requirements before towing your vehicle.

1. ***THE INSTALLER MUST STRESS TO THE OWNER THAT THE TOW BAR CONNECTION AT THE MOTORHOME AND THE TOWED VEHICLE MUST BE WITHIN THE 'SAFE ZONE.'***
   Towing with the tow bar at an upward or downward slope puts undue strain on the entire towing system. Do not tow if the tow bar is not within the 'Safe Zone' – no more than 3 inches above level or no more than 4 inches below level (See the section titled "Stay within the 'Safe Zone'" for further information.).
2. ***THE INSTALLER MUST SHOW THE OWNER HOW TO PROPERLY OPERATE THE TOW BAR.***
   Carefully read the section "Connecting and Disconnecting" and familiarize yourself with the features of the tow bar. Demonstrate them to the owner, and have the owner do a few "practice runs." You not only impress your customer with your thoroughness, but will start your customer off on a safer and happier towing experience.
3. ***THE INSTALLER MUST CAUTION THE OWNER TO USE A RECEIVER HITCH FOR THE MOTORHOME THAT IS RATED HIGHER THAN THE ACTUAL WEIGHT OF THE VEHICLE, INCLUDING ALL OF ITS CONTENTS.***
   The receiver hitch must have a minimum capacity of no less than the weight of the towed vehicle and all its contents. (The **BLACKHAWK** All Terrain non-binding tow bar is rated at a maximum of 8,000 lbs. carrying capacity; therefore ROADMASTER uses 8,000 lbs. as a standard for rating the weight capacity of all supplementary towing equipment, as well as the towed vehicle and all its contents.)
4. ***THE INSTALLER MUST BOLT THE TOW BAR TO A BRACKET ATTACHED TO THE TOWED VEHICLE'S FRAME OR UNIBODY.***
   The **BLACKHAWK** All Terrain non-binding tow bar is designed as a bolt-on device only. Virtually all vehicles require a mounting bracket assembly that is connected safely to the frame, unibody or chassis and extends beyond the bumper. Using a mounting bracket kit designed by ROADMASTER takes the burden of doubt away from the installer. **Under no circumstances should the tow bar be welded to the vehicle, nor should any of the pre-punched mounting holes be altered.**
   Never heat, bend or weld a ROADMASTER tow bar or it will weaken metals, resulting in non-warranty failure. In fact, any welding or altering of the tow bar will void the owner's warranty.

continued on next page

Installer 'musts' for towing safety

continued from preceding page

5. ***THE INSTALLER MUST ADVISE THE OWNER TO USE 8,000 LB. OR HIGHER RATED SAFETY CABLES.***
   A frame-to-frame safety cable is legal in *ALL* states.
6. ***THE INSTALLER MUST STRESS THE IMPORTANCE OF OWNER SENDING IN WARRANTY.***
   New owners are to be urged to send in the ***Product Registration Card*** as soon as possible. This will enable ROADMASTER to expedite any claim or update important information concerning the **BLACKHAWK** All Terrain tow bar.
7. ***THE INSTALLER MUST READ INSTRUCTIONS THOROUGHLY BEFORE MOUNTING THE TOW BAR.***
   Proper mounting of the tow bar is of utmost importance. Proper centering and height positioning of the tow bar will give the owner a safe, dependable and trouble-free towing system.
8. ***THE INSTALLER MUST BE SURE THAT THE VEHICLE IS SUITABLE OR ADAPTABLE FOR TOWING.***
   Not all vehicles can be safely towed as manufactured. A few models are not towable under any condition and others require additional equipment such as a transmission lube pump, axle lock, driveline disconnect or free-wheeling hubs to make them towable. Failure to properly equip the towed vehicle will result in severe damage to the transmission. Also, the steering wheel MUST be unlocked for towing. Check the manufacturer's specifications for the proper towing procedures.
9. ***THE INSTALLER MUST NOT USE THE TOW BAR AS A GROUND FOR WELDING.***
   Connecting a ground to the A-frame of the **BLACKHAWK** All Terrain non-binding tow bar will cause current to flow through the locking spring, which will detemper the spring and destroy the locking mechanism. **Under no circumstances should the tow bar be welded to the vehicle, nor should any of the pre-punched mounting holes be altered.** In fact, any welding or altering of the tow bar will void the owner's warranty.

WARNING	**Failure to follow these instructions may result in property damage, personal injury or even death.**

INSTALLATION INSTRUCTIONS

Owners and installers *must* read the installation instructions and *carefully* note the warnings!

Figure A

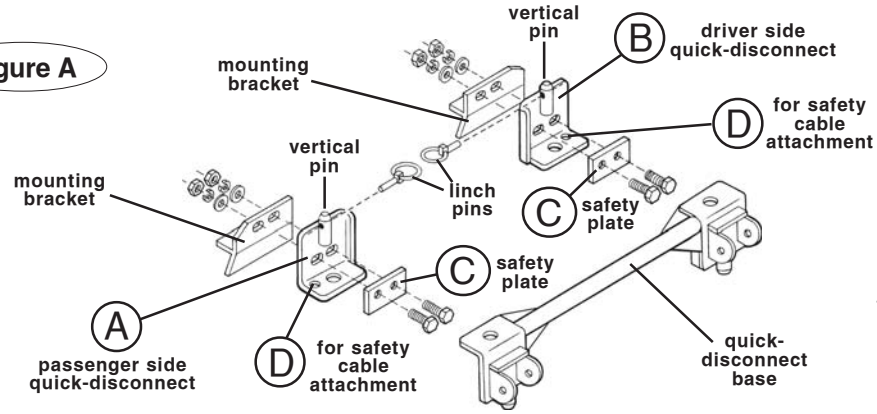

Parts List:
(2) Quick-disconnects (parts A & B)
(2) Safety plates (C)
All mounting hardware

1 First, mount the quick-disconnects – parts "A" and "B" – to the mounting brackets. Before you start, note that parts "A" and "B" have an extra hole – "D" – designed for safety cable attachment. Mount parts "A" and "B" so that the "D" holes are to the outside. Also, mount both parts "A" and "B" so that the vertical pin on each is facing upward, as illustrated in Figure A.

Attach part "A" on the passenger side, as shown above, and part "B" on the driver side. Use the supplied ½" x 1½" bolts, the safety plates ("C"), flat washers, lock washers and nuts to attach them. Do not tighten – leave loose for now – they will be tightened later. *continued on next page*

WARNING **Use all mounting hardware and both safety plates. If all supplied materials are not used, the quick-disconnects, the quick-disconnect base, or other components may vibrate loose, which may cause property damage, personal injury or even death.**

CAUTION **The quick-disconnects (parts "A" and "B") must be centered on the mounting brackets for the tow bar to be centered. If parts "A" and "B" are mounted too far to the left or the right, it will cause excessive tire wear, which is not covered by warranty.**

continued from preceding page

2 Now, mount the quick-disconnect ("QD") base by lowering it so that the vertical pins of quick-disconnects "A" and "B" extend upward through the top holes of the QD base. At the same time be sure the lower vertical pins of the QD base slide through the lower holes on parts "A" and "B." Refer to Figure B. The proper installation of each quick-disconnect and the QD base at the vehicle mounting brackets should look like Figure B.

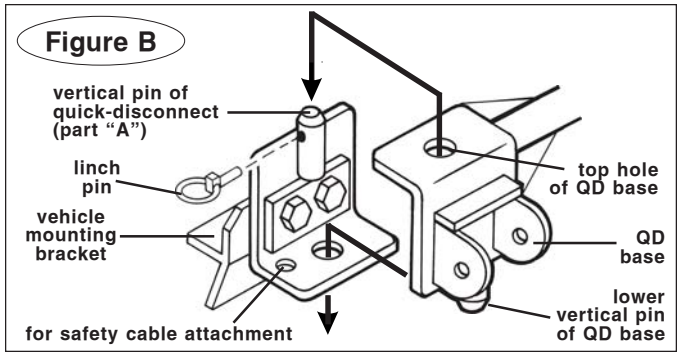

3 Both linch pins **must** be inserted through the upper holes in the vertical pins in parts "A" and "B," as illustrated in Figure B, and **locked** as illustrated in Figure C, to keep the QD base secure.

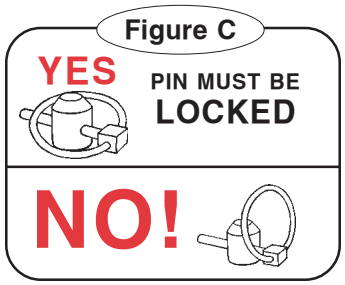

WARNING **Towing vibrations will force the linch pins to wiggle out unless they are properly LOCKED in place over the vertical pins on both quick-disconnects. Refer to Figure C. Failure to install the linch pins properly will result in tow bar malfunction, loss and damage to your vehicle and property, personal injury or even death. You will lose your car.**

4 Adjust the spacing of quick-disconnects "A" and "B" until the QD base slides on and off easily. Now, torque all bolts to 75 ft./lbs. If safety cables are required for your ROADMASTER tow bar bracket (Refer to the tow bar bracket instructions.), use a quick link to attach the long safety cables to the "D" holes located to the outside of quick-disconnects "A" and "B." The quick links are also used to connect the short safety cables to ROADMASTER XL, MX and EZ series brackets.

WARNING **Unless the safety cables are attached to the quick-disconnect mount properly, the safety cables will not keep you from losing your towed vehicle in the event the tow bar comes off the quick-disconnect mount. Failure to correctly attach the safety cables may result in property damage, personal injury or even death.**

CONNECTING AND DISCONNECTING

WARNING **Use caution when handling the tow bar to be sure that your hands, fingers or any part of your body do not get caught between any moving components. Doing so can result in pinching, crushing or cutting, causing personal injury.**

Connecting the Vehicle

1. Follow the "Installation Instructions," in this manual, to mount the **BLACKHAWK** All Terrain quick-disconnect (QD) base.
2. Drive the vehicle to be towed up to the rear of your motorhome, within 3 to 3½ feet of the hitch receiver. The vehicle doesn't have to be perfectly on center, just close. Put the vehicle in gear (park), set the emergency brake and chock one of the wheels.
3. With the **BLACKHAWK** All Terrain tow bar in the folded position (Fig. 1), insert it into the motorhome's hitch receiver, and secure it with the Hitch Pin and Clip (Fig. 3).
4. Firmly hold both tow bar arms and rotate them so that they are vertical, as shown in Figure 2.

WARNING **Never let go of the arms when they are in the vertical position. The arms can fall and cause severe injury if any part of your body is in the way.**

5. Push the release latch (Fig. 3) forward, to bring both arms down to a horizontal position.
   Standing to one side, swing both arms away from you, aligning the outermost arm with the tabs on the quick-disconnect base (Fig. 4).
   Using the included Base Pin (Fig. 4), attach the arm and secure it with a linch pin or optional padlock. Now, swing the other arm to the opposite side and connect it in the same manner.

WARNING **Both base pins must be installed and locked as shown in Figure 5. Failure to properly secure both base pins will result in the loss of the towed vehicle, causing property damage, personal injury or even death.**

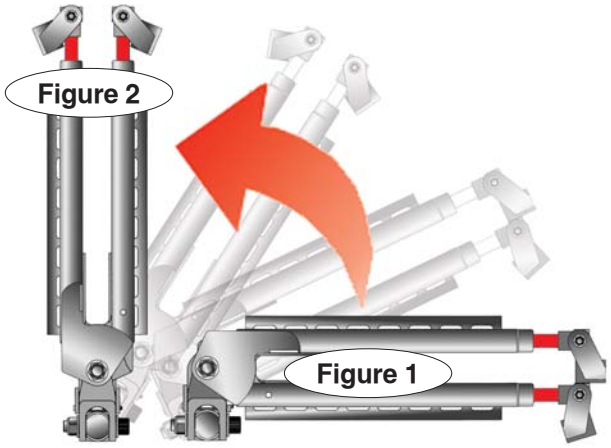

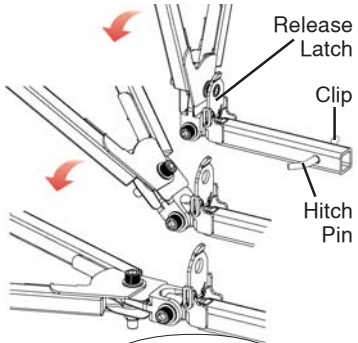

Figure 3

6. Attach the safety cables (or chains) and plug in your light wiring harness, according to the supplier's instructions. Before towing your vehicle, be sure the **steering is unlocked**, the transmission is in the proper setting, and the emergency brake is released.
Check the manufacturer's specifications, or check the owner's manual, or talk to your installer for the proper towing procedures or requirements.

WARNING **Do not tow your vehicle until the tow bar is secure, with all pins and/or locks. Unless your tow bar is secured to both vehicles with all designated pins and/or padlocks, you will lose your towed vehicle, which may cause property damage, personal injury or even death.**

WARNING **Do not tow a vehicle using tow bar mounting brackets, safety cables, or a hitch receiver rated less than the actual weight of the towed vehicle. If the brackets, safety cables, hitch receiver or any supplementary towing equipment is not rated at the weight of the towed vehicle, it may fail during towing, resulting in property damage, personal injury or even death.**

When you drive away, steer briefly to the left and then to the right, to extend, self center and lock the tow bar. Always stop at this time. Check the tow bar to ensure that both arms are locked, before assuming highway speed. Check the other components of your towing system, to ensure that they are fully engaged.
continued on next page

Figure 4

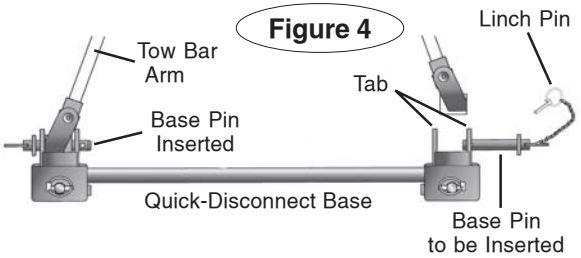

Figure 5

Both base pins must be installed and locked, as illustrated.

WARNING **If you use any kind of receiver extension, the tow bar MUST be no more than 3 inches off level. DO NOT TOW if the BLACKHAWK All Terrain tow bar is more than 3 inches out of level while using a receiver extension. Extensions cause the towing system to swing much higher and lower going over dips. The enlarged arc of motion creates excessive strain on the tow bar, brackets and frame, which can cause the towing system to fail, resulting in property damage, personal injury or even death.**

Disconnecting the Vehicle

1. Detaching your towed vehicle is essentially the reverse of connecting it. First, always try to park on level ground, with the towed vehicle in line with the motorhome. This will eliminate most of the tension between the vehicles, allowing for an easier disconnect.
2. Disconnect any towing accessories, wiring harness, cables, etc.
3. Lift the lever on the Freedom Latch (Fig. 6) to release the locking mechanism. Usually, one of the latches will require more pressure to release. This is the arm that has the majority of the tension between the two vehicles.
4. Put the car in gear (park), set the emergency brake, and chock one of the wheels.

WARNING **Always put the towed car in gear (park), set the emergency brake and chock one of the wheels after releasing the locking mechanism. Failure to do so may cause a runaway vehicle or may crush you between the towed car and the motorhome, resulting in property damage, personal injury, or even death.**

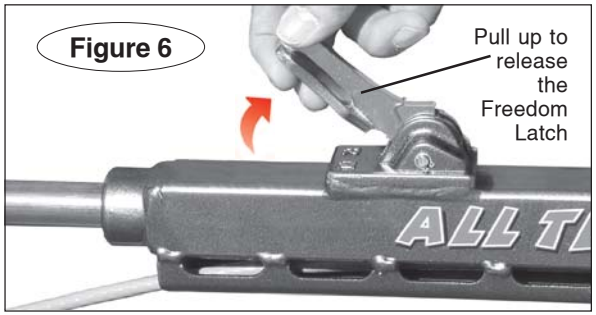

Figure 6

5. Remove the base pins and store the **BLACKHAWK** All Terrain on the motorhome by reversing the hook-up procedure (under “Connecting the Vehicle”).
   ROADMASTER recommends replacing at least one of the linch pins with a padlock (part number 301 or part number 302) to prevent accidental release or theft.

WARNING **Failure to follow these instructions may result in property damage, personal injury or even death.**

PROPER INSTALLATION OF SAFETY CABLES

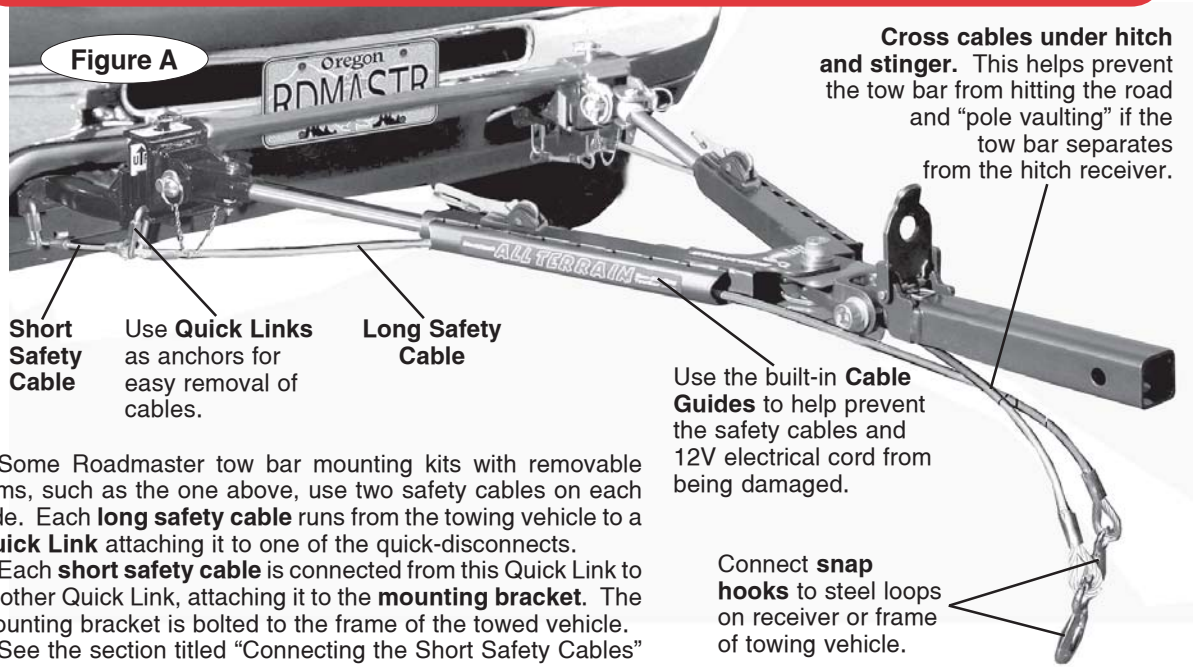

Some Roadmaster tow bar mounting kits with removable arms, such as the one above, use two safety cables on each side. Each **long safety cable** runs from the towing vehicle to a **Quick Link** attaching it to one of the quick-disconnects.

Each **short safety cable** is connected from this Quick Link to another Quick Link, attaching it to the **mounting bracket**. The mounting bracket is bolted to the frame of the towed vehicle.

See the section titled "Connecting the Short Safety Cables" for further information.

WARNING **USE ONLY 8,000 LB. (or higher) RATED SAFETY CABLES. Cables must be carefully routed so that they cannot become pinched, frayed, scraped or damaged. Also, make sure your cables are routed so that they will not drag when going over dips or low spots. DO NOT USE CABLES if they show any signs of wear or damage. Immediately discontinue towing and replace the cables. Failure to follow these instructions will cause cable failure, resulting in property damage, personal injury or even death.**

CONNECTING THE SHORT SAFETY CABLES

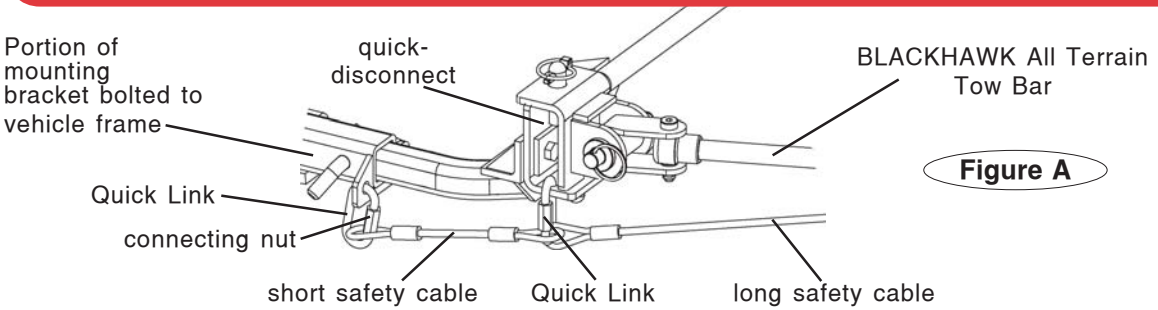

Figure A

Some ROADMASTER tow bar mounting kits with removable arms, such as the one illustrated in Figure A, use two safety cables on each side. Each **long safety cable** runs from the towing vehicle to a **Quick Link** attaching it to one of the Quick Disconnects.

Unscrew the nuts on each Quick Link to connect the safety cable loops; finger-tighten the nuts firmly, until the loop is completely closed, to secure the attachment. Do not substitute caribiners or other devices for the Quick Links – the Quick Links are rated at 8,000 lbs. carrying capacity; caribiners or other devices are not.

WARNING **If the Quick Links are not completely tightened, with the loop closed, the safety cables may detach. In the event of a towing system failure, you will lose your towed vehicle, which may cause property damage, personal injury or even death.**

Each **short safety cable** is connected from the first Quick Link to another Quick Link, which attaches it to the **mounting bracket**. The mounting bracket is bolted to the frame of the towed vehicle.

Only ROADMASTER bracket kits with removable arms have these short safety cables. Other bracket kits are bolted directly to the frame of the towed vehicle and do not require short safety cables. If your ROADMASTER bracket kit contains short safety cables, refer to the installation instructions for complete information.

WARNING **If your towing system requires two sets of safety cables, always use both the long and the short safety cables. Connect them as illustrated above. Otherwise, in the event of a towing system failure, you will lose your towed vehicle. Failure to follow these instructions may cause property damage, personal injury or even death.**

HOW TO USE SAFETY CABLES

1. Always cross cables under the hitch as shown in Figure A under “Proper Installation of Safety Cables.” In the unlikely event the tow bar ever separates from the motorhome, crossing the cables will help prevent the tow bar from dragging on the ground, causing it to “pole vault” the towed vehicle.
2. Pull the safety cables so that all of the slack is at the motorhome. **IMPORTANT: Make sure there is enough slack in the cables at the motorhome to allow sharp turns.** If you have a hitch extension or other equipment that extends the distance between your towed car and motorhome, the standard cables may be too short. Failure to use long enough cables will result in severe non-warranty damage to the towing system when turning sharp corners. If you require longer cables, contact ROADMASTER or your dealer.

   IMPORTANT – Cables too long: On some hook-ups, the cables may be too long, and may hang too low. The cables will drag when traveling over dips and low spots, resulting in non-warranty damage. If your cables are too long, you will need to wrap the excess cable around the bar to take up the slack. **REMEMBER TO LEAVE ENOUGH SLACK FOR TURNING SHARP CORNERS!**
3. If safety cables are required for your ROADMASTER tow bar bracket, the safety cables **MUST** be attached. This is required by law. Refer to the tow bar bracket instructions. If safety cables are required, you MUST connect them between the quick-disconnect (Hole "D" – refer to Figure A under “Installation Instructions”) and the portion of your mounting bracket that is permanently bolted to your towed car.
4. Make sure your safety cables are rated at 8,000 lbs. per pair. Your vehicle and all its contents cannot exceed 8,000 lbs.
5. The safety cables can be reversed if you prefer to have the Snap Hooks at the towed vehicle instead of the motorhome. This requires two Quick Links (not included).

WARNING **Failure to follow these instructions may result in property damage, personal injury or even death.**

STAY WITHIN THE 'SAFE ZONE'

Towing with a motorhome-mounted tow bar which has an upward or downward slope puts undue strain on the entire towing system. **DO NOT TOW if the tow bar is not within the 'Safe Zone' – no more than 3 inches above level or 4 inches below level**. Towing a vehicle with a tow bar that is not within the Safe Zone will result in significant wear and tear on the tow bar and brackets, significant wear and tear on the vehicle's suspension and frame, and the eventual failure of your towing system.

To determine if your tow bar is within the Safe Zone – First, connect the motorhome and car on level ground. Measure the distance from the center of the motorhome receiver down to the ground. Then, measure the distance from the center of one of the base pins down to the ground.

Compare these two measurements. To be within the Safe Zone, they cannot be more than 3 inches apart if the base pin is above the motorhome receiver, or 4 inches apart if the base pin is below the motorhome receiver.

If your tow bar is not within the Safe Zone, you will need to change your hitching equipment to bring the tow bar within the Safe Zone.

Towing more than 3 inches above level or 4 inches below level will void the ROADMASTER Warranty.

WARNING **Failure to follow these instructions may result in property damage, personal injury or even death.**

CARE AND CLEANING

Your tow bar requires regular cleaning and lubricating to assure long-term, trouble-free operation. Use the following guidelines when maintaining your tow bar:

Always clean the bar before lubricating. Use Roadmaster's Voom RV Cleaner and Degreaser (part number 9911, shown at right). It does an exceptional job of breaking down road film, dirt and grease. Spray a liberal amount on the tow bar, then operate the tow bar to work the cleaner into all of the moving parts. Once you've cleaned the bar, wipe any remaining cleaner away before lubricating.

Now that you have a clean, dry tow bar, spray a liberal amount of Roadmaster LubeMaster Silicone Spray (part number 747, shown at right) over the stainless steel components of the tow bar. Note: DO NOT SPRAY ANY SILICONE DIRECTLY INTO THE FREEDOM LATCH! Silicone coats and covers in a thin layer. If you spray silicone inside the Freedom Latch housing, it reduces the clearance for the locking mechanism, preventing proper operation.

Proper cleaning and lubrication of the tow bar will help prevent corrosion on your tow bar and provide smoother operation.

NOTE: To remove scratches and restore luster on the stainless steel arms, we suggest that you use extra fine (0000) steel wool, 3M "Scotch Brite" (fine pad) or a similar product.

Voom RV Cleaner and Degreaser part number 9911

LubeMaster Silicone Spray part number 747 – meets Volatile Organic Compound (VOC) standards

ROADMASTER LIMITED WARRANTY

1. **WARRANTY**

1a. **WARRANTY OF CONFORMITY AT TIME OF SALE**

ROADMASTER, Inc. warrants that at the time of sale of this product it will be free from defects in material and manufacture and will conform to ROADMASTER'S specifications for the product.

1b. **CONDITIONAL ONE-YEAR WARRANTY**

In addition to the preceding time-of-sale warranty, if the product registration card is completely and accurately filled out and mailed to ROADMASTER within thirty (30) days of purchase, ROADMASTER will provide an additional warranty that for a period of one year after sale the product will remain in good working order, PROVIDED THAT the product is installed and maintained in accordance with ROADMASTER'S instructions and is not subjected to: (a) alteration or unauthorized repairs or repairs by anyone other than ROADMASTER or a ROADMASTER-authorized service center, (b) misuse, abuse, commercial use, or improper maintenance, (c) Acts of God (including without limitation hurricanes, tornadoes, floods, or other severe weather or natural phenomena), (d) failures due to products not supplied by ROADMASTER, or (e) other treatments, uses, or installations for which the product was not intended. This warranty extends only to the first retail purchaser-consumer of the product and is not transferable.

EXTENDED WARRANTY PERIOD: If ROADMASTER receives the product registration card, completely and accurately filled out, within twenty (20) days of purchase, ROADMASTER will enlarge the one-year warranty period in the preceding paragraph to a period of two years.

2. **DISCLAIMER OF OTHER WARRANTIES**

The preceding warranties are the exclusive and sole express warranties given by ROADMASTER. They supersede any prior, contrary or additional representations, whether oral or written. No agent, representative, dealer or employee has the authority to alter or increase the obligations or limitations of this warranty. Any implied warranties, including the WARRANTY OF MERCHANTABILITY and any WARRANTY OF FITNESS FOR A PARTICULAR PURPOSE, are limited in duration to thirty days or the term of the applicable express warranty provided above, whichever is longer.

Some states do not allow limitations on how long an implied warranty lasts, so the above limitation may not apply to you.

3. **EXCLUSIVE REMEDY FOR ANY NONCONFORMITIES**

If during the applicable Warranty Period, the product does not conform to the preceding Warranties, notify ROADMASTER as provided below, and within a reasonable time ROADMASTER will provide, at its option, one of the following: (1) replacement components for any nonconforming or defective product or components or (2) the percentage of the purchase price for the nonconforming product equal to the percentage of the Warranty Period remaining when ROADMASTER is notified of the nonconformity. ROADMASTER will, at its option, (a) use new and/or reconditioned parts in performing warranty repairs and making replacement products, (b) use parts or products of original or improved design in the repair or replacement. If ROADMASTER repairs or replaces a product, its warranty continues for the remaining portion of the original Warranty Period

continued on next page

Roadmaster Limited Warranty

continued from preceding page

or 60 days from the date of the return shipment to the customer, whichever is greater. All replaced products and all parts removed from repaired products become the property of ROADMASTER. ROADMASTER will not provide, and will not be liable for, labor, costs of removal or reinstallation of components, disposal, shipping, freight, taxes, or other incidental charges.

THESE REMEDIES ARE THE EXCLUSIVE AND SOLE REMEDIES FOR ANY BREACH OF WARRANTY.

For any breach of warranty, the Owner must telephone ROADMASTER at 1-800-669-9690 within thirty (30) days after discovering the nonconformity. Do not return any product without first calling ROADMASTER and getting a return authorization number. Returned products must include the return authorization number and a copy of the original invoice, bill or other proof of the date of purchase. The date of purchase must coincide with the original warranty registration card on file. ROADMASTER will authorize (a) shipment of the product to ROADMASTER or (b) repair or replacement at the nearest warranty service center–in both cases with shipping at your expense. Do not purchase replacement parts or pay for repair labor–you will not be reimbursed. Compliance with the requirements of this paragraph is a condition to coverage under the Warranty: if these requirements are not complied with, ROADMASTER will have no obligation to provide any remedy for any breach of warranty.

4. **DISCLAIMER OF INCIDENTAL AND CONSEQUENTIAL DAMAGES**

IN NO EVENT SHALL ROADMASTER BE LIABLE FOR ANY INCIDENTAL, SPECIAL, INDIRECT OR CONSEQUENTIAL DAMAGES, WHETHER RESULTING FROM NONDELIVERY OR FROM THE USE, MISUSE OR INABILITY TO USE THE PRODUCT OR FROM DEFECTS IN THE PRODUCT.

Some states do not allow the exclusion or limitation of incidental or consequential damages, so the above limitation may not apply to you.

5. **APPLICABLE LAW**

This Warranty will be interpreted, construed, and enforced in all respects in accordance with the laws of the State of Oregon, without reference to its choice of law rules. The U.N. Convention on Contracts for the International Sale of Goods will not apply to this Warranty.

6. **SEVERABILITY**

If any provision of this warranty is found to be invalid or unenforceable, then the remainder shall have full force and effect, and the invalid provision shall be partially enforced to the maximum extent permitted by law to effectuate the purpose of the agreement.

7. **ADDRESS FOR NOTICES TO ROADMASTER**

ROADMASTER, Inc., 5602 N.E. Skyport Way, Portland, OR 97218

This warranty gives you specific legal rights, and you may also have other rights which vary from State to State.

BlackHawk ALL TERRAIN™ Non-Binding TowBar

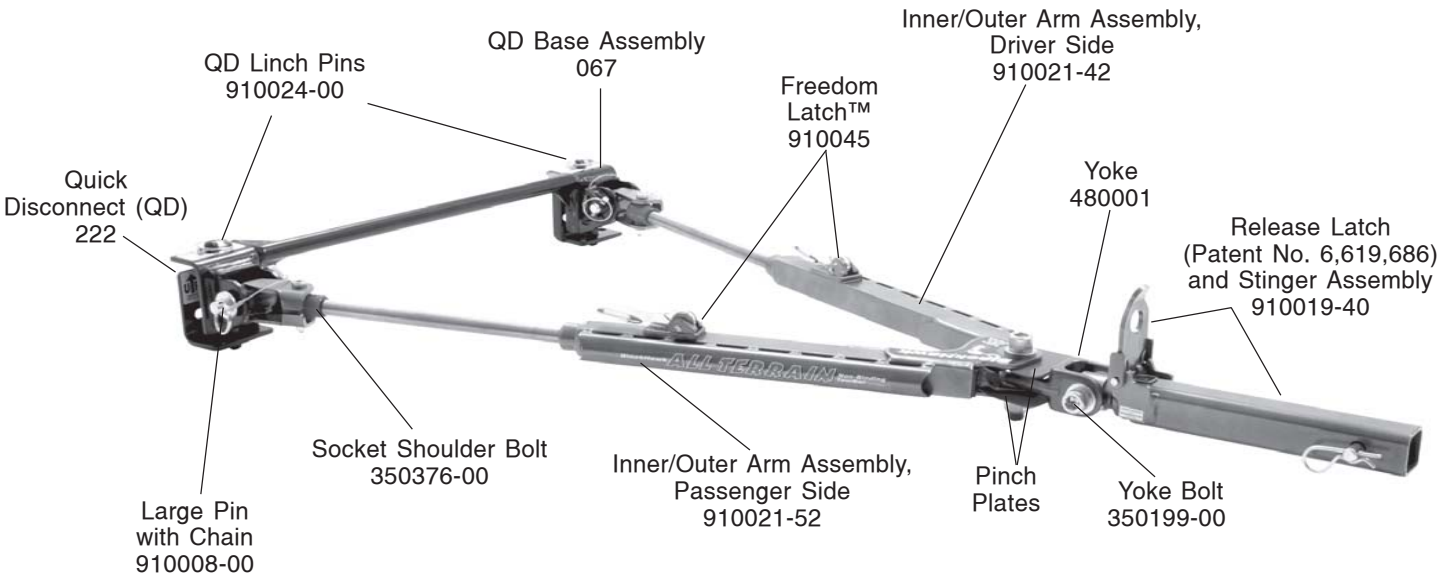

ROADMASTER

Quality Towing Systems Since 1974

ROADMASTER, Inc. 5602 N.E. Skyport Way • Portland, OR 97218
800-669-9690 • Fax 503-288-8900 • www.roadmasterinc.com

© 2005 ROADMASTER, Inc. All Rights Reserved 06/2005 852483-02