Towing and Suspension Solutions

Owner's Manual

Entire contents of manual must be read by owner

Welcome to the ROADMASTER family!

This manual has been prepared to acquaint you with the installation, operation, care and maintenance of your tow bar, and to provide you with important safety information.

Read your owner's manual cover to cover. Understand how to install and operate your tow bar, and carefully follow the instructions and safety precautions.

Your tow bar has a one-year limited warranty. To qualify for your warranty, fill out and return the enclosed product registration card within 30 days of purchase. **As a bonus, we'll extend your warranty to a total of two years at no additional cost, if we receive the product registration card within 20 days of purchase.**

We thank you for your patronage and greatly appreciate your discerning taste.

IMPORTANT NOTICE!

Safety Definitions

Statements in this manual identified as follows are of special significance:

⚠ WARNING

WARNING indicates a potentially hazardous situation which, if not avoided, could result in property damage, serious personal injury, or even death.

⚠ CAUTION

CAUTION indicates a potentially hazardous situation which, if not avoided, may result in property damage, or minor or moderate personal injury.

CAUTION

CAUTION used without the safety alert symbol indicates a potentially hazardous situation which, if not avoided, may result in property damage.

NOTE

Refers to important information and is placed in italic type. It is recommended that you take special notice of these items.

Table of Contents

Safety definitions ..... inside front cover
Safe towing practices 2-4
Installer's safety checklist.....5-6
Installing the 'quick-disconnect' system.....7-9
Connecting and disconnecting
Connecting the tow bar 10-13
Disconnecting the tow bar.....14
Safety cables
How to use safety cables.....15
Proper installation of safety cables 16-17
Stay within the 'Safe Zone'.....18
Care and cleaning 19-20
Limited warranty 21-22
Tow bar components 23

Your tow bar serial number...

...is located on a label on the inside of the passenger's side tow bar arm. You will need this number when you fill out your product registration card.

Write down the serial number in the space below and retain for future reference.

Serial number: _____

⚠ WARNING

Read all instructions before installing the tow bar, or before towing a vehicle. Failure to understand how to properly install or operate the tow bar could result in property damage, personal injury or even death.

Safe towing practices

To ensure your safety and that of your passengers, as well as the safety of others on the road, follow these safe towing practices at all times.

CAUTION

- **Do not back up the motorhome with the towed vehicle attached.**

Backing up with the towed vehicle attached will cause the towed vehicle to "jackknife," which will damage the tow bar, the mounting bracket, the receiver hitch, the towed vehicle's front end, and/or the rear of the motorhome. Backing up with the towed vehicle attached is the primary cause of tow bar damage and will void the warranty.

- **Be sure the vehicle can be towed** before taking it on the road. Some vehicles must be equipped with a transmission lube pump, an axle disconnect, driveline disconnect or free-wheeling hubs before they can be towed. Failure to properly equip the vehicle will cause severe damage to the transmission.

Check the vehicle manufacturer's instructions for the proper procedure(s) to prepare the vehicle for towing.

- **The tow bar must be within the 'Safe Zone'** – no more than three inches above or below level.

Towing with an out-of-level tow bar will cause significant wear and tear on the tow bar and mounting brackets, and on the towed vehicle's suspension and frame. (See the section titled "Stay within the 'Safe Zone'" for further information.)

- **The steering wheel must be unlocked and free to turn when towing.** Failure to do so can cause severe tire and equipment damage. Check the manufacturer's instructions for the proper towing procedure(s).
- **Always use safety cables when towing.** The safety cables must connect the towed vehicle to the towing vehicle, frame to frame.

Additionally, check to ensure that the safety cables are the proper length. Refer to the sections titled "How to use safety cables" and "Proper installation of safety cables" for further information.

- **Choose safety cables based on the weight of the towed vehicle.**
  - If the towed vehicle and all its contents weigh 6,000 pounds or less, use 6,000-pound rated safety cables. There are several choices in this range – call ROADMASTER (800-669-9690) or visit www.roadmasterinc.com.
  - If the towed weight is between 6,000 and 8,000 pounds, use 8,000-pound capacity safety cables (double or single hook, part numbers 648 or 649).
  - If the towed weight is between 8,000 and 10,000 pounds, you must use 10,000-pound rated safety cables or chains.

The weight capacity of the safety cables must meet or

continued on next page

Safe towing practices

continued from preceding page

exceed the towed weight, or the safety cables will fail.

- The BlackHawk 2 All Terrain tow bar is rated at a maximum of 10,000 pounds carrying capacity; therefore **the weight of the towed vehicle and all its contents cannot exceed 10,000 pounds.** Above 8,000 pounds, 10,000-pound capacity safety cables or chains must be used. In addition, the receiver hitch and all supplementary towing equipment must be rated at no less than the weight of the towed vehicle and all its contents.
- **The tow bar must be secured with linch pins (or optional padlocks) before towing.** Unless the tow bar is secured to both vehicles with all appropriate pins (or padlocks), the towed vehicle will detach.
- **Inspect the system before towing** – check the mounts, brackets, fasteners, bolts, wiring, the safety cables and all other components each time before towing.

Additionally, check the tow bar bracket every 3,000 miles – inspect for any fractures or cracks in the steel, or any visible damage. Do not tow if the tow bar bracket is damaged.

Additionally, check the torque on all bolts. (To find the torque ratings, refer to the installation instructions for the mounting bracket and the tow bar.)

- **Never tow a vehicle with one of a comparable weight.** The towed vehicle's weight should never exceed 40 percent of the towing vehicle's weight.

Towing a vehicle with one of similar weight will cause the towed vehicle to override the towing vehicle, resulting in "jackknifing," "leapfrogging," or "fishtailing." Serious damage to both vehicles, as well as the towing system, could result.

- **Always stand to one side and as close to the motorhome as possible when releasing the tow bar locking mechanisms.** Never stand between the adjustable arms, or put any part of your body between the adjustable arms, when releasing the tow bar – always stand to one side.

Because the towed vehicle may jerk forward when the locking mechanisms are released, face the towed vehicle and stand as close to the back of the motorhome as possible before releasing the locking mechanisms, to keep from being hit by the towed vehicle.

- **Check the motorhome turning radius.** Some motorhome chassis have such a tight turning radius that you can damage your motorhome, towed vehicle or tow bar while turning too sharply. Before getting on the road with your towed vehicle, you should test your turning radius in an empty parking lot.

With the towed vehicle attached, have someone watch as you slowly turn sharply to see whether you have this potential problem. If you do, note how far you can safely turn the motorhome's steering wheel, and be sure not to turn it further when towing. Damage that results from turning too sharply is not covered by warranty.

- **Never use the tow bar to tow more than one vehicle.**

continued on next page

Safe towing practices

continued from preceding page

In some states it is legal to have one vehicle towing more than just one vehicle (for example, a truck which is towing a trailer which is towing a boat). However, when using a tow bar, never tow more than one vehicle, or non-warranty damage or injury may result.

- **The tow bar stinger fits motorhome hitch receivers with two-inch inner diameters.** If the motorhome hitch receiver is a larger size, attach a two-inch adaptor sleeve (not supplied) to the hitch receiver.

  Damage to the tow bar stinger or other components of the tow bar, abnormal wear patterns on the towed vehicle's tires, as well as other, consequential damage may result if an adaptor sleeve is not used.

- **Keep the tow bar clean and well-lubricated.** As is the case with most precision equipment, frequent cleaning and care results in better performance and longevity.

  Refer to the section titled "Care and cleaning" for further information.

⚠ WARNING

Failure to follow these instructions may cause property damage, personal injury or even death.

Installer's safety checklist

The following safety checklist is provided to the installer with the instructions for installing the BlackHawk 2 All Terrain tow bar. It is repeated here for your information.

As a precaution, verify that all safety requirements have been followed before towing the vehicle.

- **Stress to the owner that the tow bar must be within the 'Safe Zone'** – no more than three inches above or below level. Towing with an out-of-level tow bar will cause significant wear and tear on the tow bar and mounting brackets, and on the towed vehicle's suspension and frame. (See the section titled "Stay within the 'Safe Zone'" for further information.)
- **Show the owner how to properly operate the tow bar.** Familiarize yourself with the features of the tow bar. Demonstrate them to the owner, and ask the owner to connect and disconnect the tow bar and other components of the towing system, until the owner is comfortable with its operation.
- **Advise the owner to always use safety cables when towing.** The safety cables must connect the towed vehicle to the towing vehicle, frame to frame.
- **Caution the owner to choose safety cables based on the weight of the towed vehicle.**
  - If the towed vehicle and all its contents weigh 6,000 pounds or less, use 6,000-pound rated safety cables. There are several choices in this range – call ROADMASTER (800-669-9690) or visit www.roadmasterinc.com.
  - If the towed weight is between 6,000 and 8,000 pounds, use 8,000-pound capacity safety cables (double- or single-hook, part numbers 648 or 649).
  - If the towed weight is between 8,000 and 10,000 pounds, you must use 10,000-pound rated safety cables or chains.

  The weight capacity of the safety cables must meet or exceed the towed weight, or the safety cables will fail.
- The BlackHawk 2 All Terrain tow bar is rated at a maximum of 10,000 pounds carrying capacity; therefore **the weight of the towed vehicle and all its contents cannot exceed 10,000 pounds.** Above 8,000 pounds, 10,000-pound capacity safety cables or chains must be used. In addition, the receiver hitch and all supplementary towing equipment must be rated at no less than the weight of the towed vehicle and all its contents.
- **The tow bar must be attached to a bracket which is bolted to the towed vehicle's frame or unibody.** In order to be towed, virtually all vehicles require tow bar mounting brackets that are connected to the frame, unibody or chassis and extend beyond the bumper.
- **Caution the owner to secure the tow bar with linch pins (or optional padlocks) before towing.** Unless the tow bar is secured to both vehicles with all appropriate pins (or padlocks), the towed vehicle will detach.
- **Read the instructions thoroughly before installing the 'quick-disconnect' ('QD') system and its components.**

continued on next page

Installer's safety checklist

continued from preceding page

The tow bar will be attached to the QD system. If the QD system is not properly aligned, centered and positioned on the towed vehicle, the tow bar will not be centered on the towed vehicle, which may cause excessive tire wear and other consequential, non-warranty damage.

- **The installer must be sure that the vehicle is suitable or adaptable for towing.** Some vehicles must be equipped with a transmission lube pump, an axle disconnect, driveline disconnect or free-wheeling hubs before they can be towed. Failure to properly equip the vehicle will cause severe damage to the transmission.

Check the manufacturer's instructions for the proper procedure(s) to prepare the vehicle for towing.

- **The installer must NOT use the tow bar as a ground for welding.** Connecting a ground to the 'A-frame' of the tow bar will cause current to flow through the locking spring, which will detemper the spring and destroy the locking mechanism.
- **Under no circumstances should the tow bar be welded to the vehicle**, nor should any of the pre-punched mounting holes be altered. Any welding or altering of the tow bar will void the owner's warranty.

⚠ WARNING

Failure to follow these instructions may cause property damage, personal injury or even death.

Installing the ‘quick-disconnect’ system

Quick-disconnect parts list:
(2) quick-disconnects
(parts “A” and “B”)
(2) safety plates (“C”)
All mounting hardware

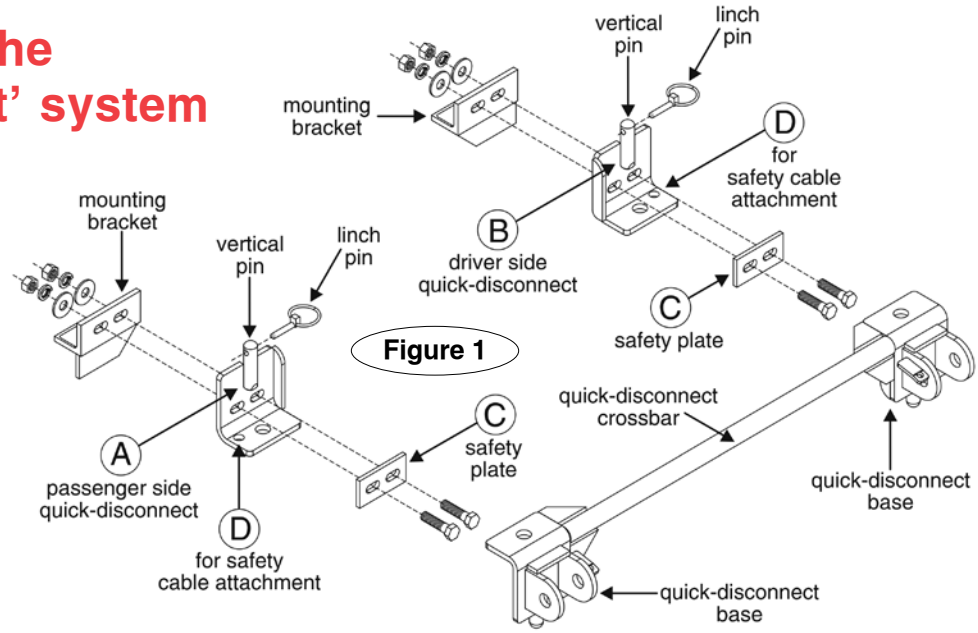

Figure 1

This ROADMASTER tow bar is equipped with an exclusive “quick-disconnect” (or, “QD”) system. Before connecting the tow bar to the vehicle, first install the components of the QD system to the mounting brackets.

Note: the quick-disconnect system is not used with ROADMASTER ‘MS’ or ‘MX’ series mounting brackets. If the towed vehicle has MS or MX brackets, proceed to the next section – “Connecting the tow bar.” The quick-disconnect system should be reserved, however, for subsequent vehicles which may not have these brackets.

1. First, attach the quick-disconnects (“QDs,” parts “A” and “B” in Figure 1) to the tow bar mounting brackets. Attach the QDs so that the vertical pin on each is pointing up, as shown in Figure 1.

Attach part “A” on the passenger side, and part “B” on the driver’s side. Use the supplied ½" x 1½" bolts, the two safety plates (parts “C”), and the flat washers, lock washers and nuts, as shown in Figure 1.

Note: both QDs have an extra hole – “D” in Figure 1 –

continued on next page

Installing the 'quick-disconnect' system

continued from preceding page

for safety cable attachment. Mount parts "A" and "B" so that the "D" holes are to the outside.

Do not tighten any of the bolts – leave them loose for now – they will be tightened later.

⚠ WARNING

Use all mounting hardware and both safety plates. If all supplied materials are not used, the quick-disconnects, the quick-disconnect bases or other components may vibrate loose, which may cause property damage, personal injury or even death.

2. Now, test-fit the crossbar – lower the crossbar (Figure 2) over the quick-disconnects. The vertical pins at the top of both QDs should fit through the top holes at the ends of the crossbar (Figure 2), and the vertical pins at the bottom of the crossbar should fit through the lower holes on the quick-disconnects (Figure 2).

3. Both quick-disconnects must be positioned so that the crossbar is centered to the front of the vehicle – measure the distance between the side of one QD and the side of the mounting bracket it is attached to. Then, make certain there is an equal distance between the other QD and the other mounting bracket.

continued on next page

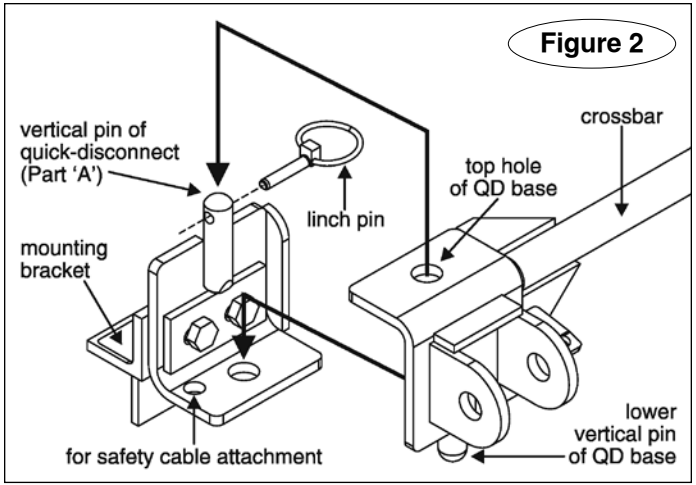

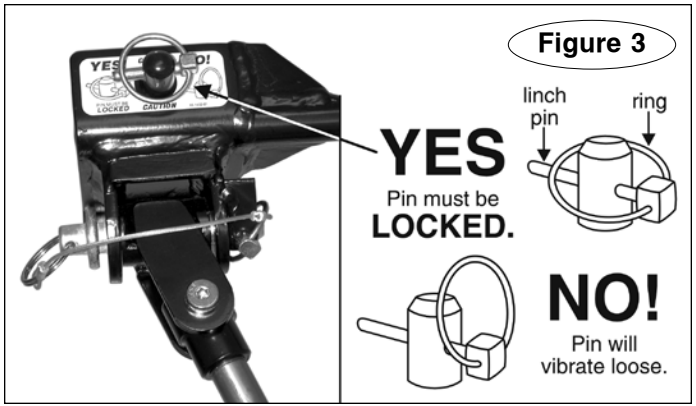

Installing the ‘quick-disconnect’ system

continued from preceding page

CAUTION

The quick-disconnects must be centered on the mounting brackets. If they are attached too far to the left or the right, the crossbar will not be centered on the towed vehicle, which will cause excessive tire wear and other consequential, non-warranty damage.

4. Once the crossbar slides on and off easily, torque the four bolts to 75 ft./lbs.

Again, test-fit the crossbar over the QDs, to verify that the crossbar slides on and off easily. If it does not, adjust the QDs again.

5. Both linch pins must be inserted through the upper holes in the vertical pins in parts “A” and “B,” as shown in Figure 2.

Both linch pins must be locked. The rings (Figure 3) are spring-loaded – they must be snapped over the pins, as shown in Figure 3, with the curved side of the linch pin touching the ring (as shown in Figure 4), in order to keep the QD bases secure.

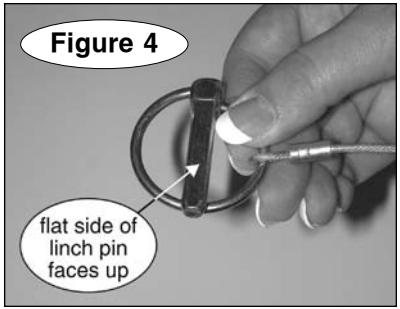

Figure 4

WARNING

Towing vibrations will force the linch pins out unless they are properly locked in place over the vertical pins on both quick-disconnects. Refer to Figures 3 and 4.

Failure to properly attach and lock both linch pins will result in the loss of the towed vehicle, which may cause property damage, personal injury or even death.

Connecting the tow bar

⚠ CAUTION

Use caution when handling the tow bar – if your hands, fingers or any part of your body are caught between moving components, they can be pinched, cut or otherwise injured.

1. Follow the preceding section in this manual – "Installing the 'quick-disconnect' system" – to attach the tow bar quick-disconnects ("QDs") and the QD bases.

Note: the quick-disconnect system is not used with ROADMASTER 'MS' or 'MX' series mounting brackets. Instead, the tow bar is connected directly to the mounting bracket with the base pins and linch pins.

With this exception, the instructions below apply.

2. Drive the vehicle within three or three-and-a-half feet of the motorhome hitch receiver. The vehicle does not have to be perfectly centered to the hitch receiver, just close. Then, put the vehicle in gear (park), set the emergency brake and chock one of the wheels.

3. With the tow bar in the folded position (Figure 5), insert the stinger into the motorhome hitch receiver, and attach the stinger to the hitch receiver with the hitch pin and clip (Figure 5).

continued on next page

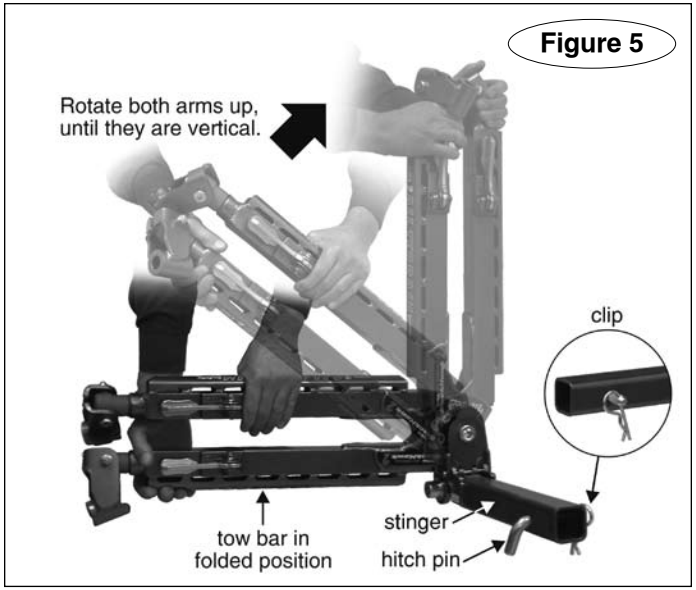

Figure 5

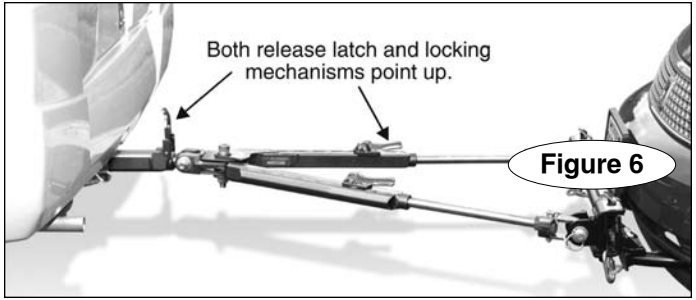

Figure 6

Connecting the tow bar

continued from preceding page

CAUTION

Attach the tow bar so that the locking mechanisms and the release latch are pointing up, as shown in Figure 6. Components of the tow bar may be damaged if the tow bar is attached with the release latch and the locking mechanisms pointing down.

4. Hold both tow bar arms firmly, and rotate them up, so that they are vertical, as shown in Figure 5.

⚠ WARNING

Never release the tow bar arms when they are in the vertical position. The arms can fall and cause severe personal injury.

5. Push the release latch (Figure 7) forward, to bring both arms down to a horizontal position.

Standing to one side, swing both arms away from you. Then, align the holes in the outermost arm with the holes in one of the tabs on the quick-disconnect base (Figure 8).

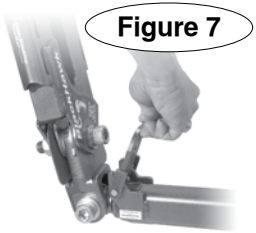

Figure 7

Attach the tow bar arm to the quick-disconnect base with one of the included base pins (Figure 8). Lock the base pin with a linch pin (Figure 9) or optional padlock.

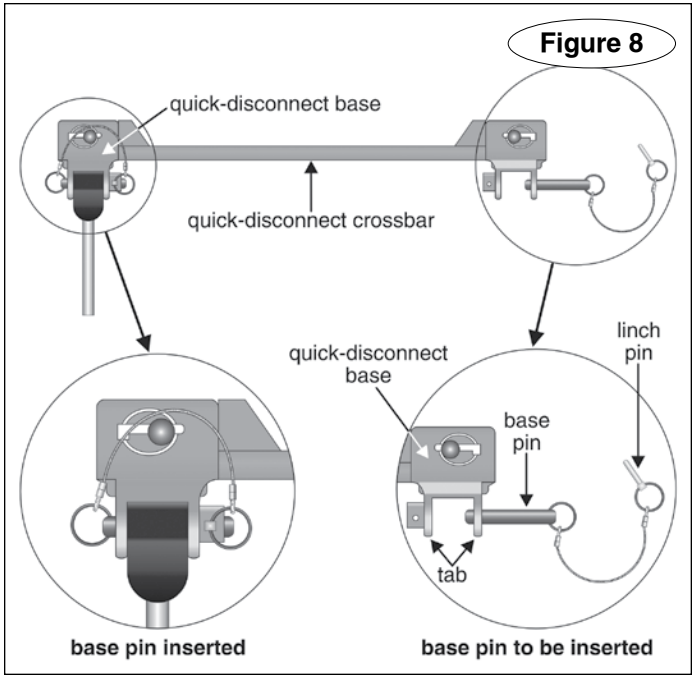

Figure 8

The linch pin must be locked. The ring (Figure 9) is spring-loaded – it must be snapped over the pin, as shown in Figure 9, with the curved side of the linch pin touching the ring (as shown in Figure 4), in order to keep the base pin secure.

continued on next page

Connecting the tow bar

continued from preceding page

⚠ WARNING

Both tow bar arms must be attached to the quick-disconnect bases and locked with a linch pin. Towing vibrations will force the linch pins out unless they are properly locked in place over the base pins on both quick-disconnect bases, as shown in Figures 9 and 4.

Failure to properly install and lock both base pins will result in the loss of the towed vehicle, which may cause property damage, personal injury or even death.

6. Now, swing the other arm to the opposite side and connect it in the same manner.

7. Attach the safety cables and plug in the electrical wiring cord, according to the supplier's instructions.

Before towing the vehicle, be sure the steering is unlocked, the transmission is in the proper setting, and the emergency brake is released. Remove the wheel chock.

Check the manufacturer's specifications, the owner's manual, or talk to the installer for the proper towing procedures or requirement(s) for the vehicle to be towed.

⚠ WARNING

Do not tow the vehicle until the tow bar is attached with all pins or padlocks. Unless the tow bar is secured to both vehicles with all appropriate pins or padlocks, the vehicle will detach, which may cause property damage, personal injury or even death.

When you drive away, steer briefly to the left and then to the right, to extend, self-center and lock the tow bar.

Always stop at this time. Check the tow bar to ensure that both arms are locked, before assuming highway speed. Additionally, check the other components of your towing system, to ensure that they are fully engaged.

⚠ WARNING

Do not tow a vehicle using tow bar mounting brackets, safety cables, or a hitch receiver rated less than the actual weight of the towed vehicle.

continued on next page

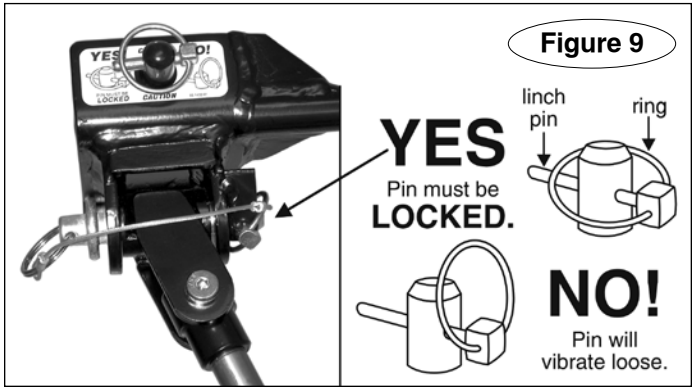

Connecting the tow bar

continued from preceding page

If the brackets, safety cables, hitch receiver or any supplementary towing equipment is not rated at the weight of the towed vehicle and all its contents, it may fail during towing, causing property damage, personal injury or even death.

WARNING

If the motorhome hitch receiver has an extension, do not tow if the tow bar is more than three inches out of level.

Receiver extensions cause the towing system to swing much higher and lower than towing systems without extensions. This enlarged arc of motion creates excessive strain on the tow bar, brackets and frame, which can cause the towing system to fail, causing property damage, personal injury or even death.

Disconnecting the tow bar

1. Disconnecting the tow bar is essentially the reverse of connecting it. First, always try to park on level ground, with the towed vehicle in line with the motorhome. This will eliminate most of the tension between the vehicles, allowing for an easier disconnect.

2. Disconnect the electrical wiring harness, safety cables, and any other towing system accessories.

3. Lift the release handles on each tow bar arm (Figure 10) to release the locking mechanisms.

(Usually, one of the handles will require more pressure to release. This is the arm that has the majority of the tension between the two vehicles.)

⚠ WARNING

Always put the towed vehicle in gear (park), set the emergency brake and chock one of the wheels after lifting the release handles, and before removing the base pins. Failure to do so may result in a 'runaway' vehicle or may crush you between the towed vehicle and the motorhome, causing property damage, personal injury or even death.

4. Put the towed vehicle in gear (park), set the emergency brake, and chock one of the wheels.

5. Remove the base pins and store the tow bar on the motorhome by reversing the connection procedure (under "Connecting the tow bar").

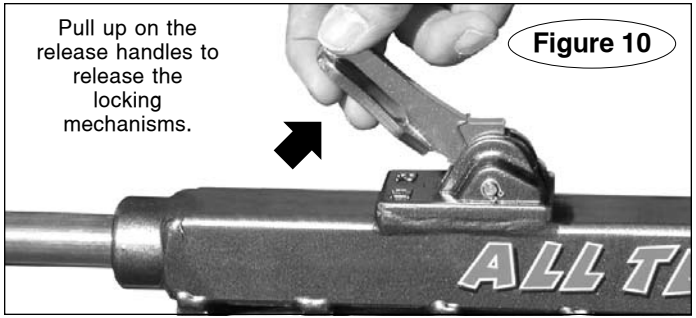

Figure 10

ROADMASTER recommends replacing at least one of the linch pins with a padlock (part number 301, 302 or 308) to prevent accidental release or theft.

CAUTION

If you choose to store the tow bar on the back of the motorhome – the bushings at the end of the tow bar arms can be warped by heat from the exhaust. If the bushings are warped, the tow bar arms will not slide easily, or they may not slide at all – it may be difficult to connect or disconnect the tow bar, or you may be unable to connect or disconnect it, until the bushings are replaced.

The tow bar can be stored on the motorhome with the arms rotated to the left or the right. To avoid the possibility of damage to the bushings, rotate the arms away from the engine exhaust.

How to use safety cables

Safety cables are an integral part of your towing system. They are a secondary safety device, required by law in many states. This section, and the following section, will acquaint you with how to use them properly.

- Choose safety cables based on the weight of the towed vehicle. **The weight capacity of the safety cables must meet or exceed the towed weight, or the safety cables will fail.** Refer to pages two and three for further information.
- The safety cables must connect the towing vehicle to the towed vehicle, frame to frame.
- Pull the safety cables so that all the slack is at the motorhome. **Make sure there is enough slack in the cables at the motorhome to allow for sharp turns** – if there is not enough slack, the towing system will be severely damaged when the motorhome turns.
- The safety cables must be the correct length…
  - Make sure the cables are not too short – if you use a receiver hitch extension or other equipment that extends the distance between the towed vehicle and the motorhome, the standard cables may be too short. If the cables are too short, the towing system will be severely damaged when the motorhome turns a sharp corner.

    (Safety cable extensions in a variety of lengths are available from ROADMASTER.)
  - Make sure the cables are not too long – the cables should not hang down to the extent they may catch on obstructions, or drag on the ground. This much slack could cause damage to the towing system, the towed vehicle or the motorhome.

    If the cables are too long, wrap the excess cable around the tow bar to take up the slack. **Make sure there is enough slack in the cables at the motorhome to allow for sharp turns.**

    Damage caused by using safety cables of an incorrect length is not covered under warranty.
- Always cross the cables under the hitch receiver, as shown in Figure 11 under “Proper installation of safety cables.” In the unlikely event the tow bar separates from the motorhome, crossing the cables will help prevent the tow bar from dragging on the ground, which can cause the tow bar to “pole vault” the towed vehicle.
- Some ROADMASTER tow bar mounting kits with removable arms use two safety cables on each side. If two sets of safety cables are required, both must be used. This is required by law. Refer to “Proper installation of safety cables” for further information.

⚠ WARNING

Failure to follow these instructions may cause property damage, personal injury or even death.

Proper installation of safety cables

Some ROADMASTER tow bar mounting brackets with removable arms, such as the ones in Figures 11 and 12, use both a long safety cable and a short safety cable on each side.

Each **long safety cable** runs from the towing vehicle to a **quick link**, attaching it to one of the quick-disconnects. This quick link is also an attachment point for one of the **short safety cables**; another quick link attaches the short safety cable to the mounting bracket.

Unscrew the nuts on each quick link to connect the safety cable loops. Finger-tighten the nuts firmly, until the loop is completely closed, to secure the attachment.

Do not substitute carabiners or other devices for the quick links – the quick links are designed to hold the weight of a towed vehicle; carabiners or other devices are not.

Only ROADMASTER bracket kits with removable arms have these short safety cables. Other bracket kits are bolted directly to the frame of the towed vehicle and do not require short safety cables.

If your ROADMASTER bracket kit contains short safety cables, refer to the installation instructions for complete information.

⚠ WARNING

The safety cables must be carefully routed so that they cannot become pinched, frayed, scraped or otherwise damaged, and so they will not drag when going over dips or low spots.

Do not use the cables if they show any signs of wear or damage – immediately discontinue towing and replace the cables.

Failure to follow these instructions will result in cable failure, which may cause property damage, personal injury or even death.

⚠ WARNING

If the quick links are not completely tightened, with the loop closed, the safety cables may detach. In the event of a towing system failure, the towed vehicle will detach, which may cause property damage, personal injury or even death.

⚠ WARNING

If your towing system requires two sets of safety cables, always use both the long and the short safety cables. Connect them as shown in Figures 11 and 12. Otherwise, in the event of a towing system failure, the towed vehicle will detach, which may cause property damage, personal injury or even death.

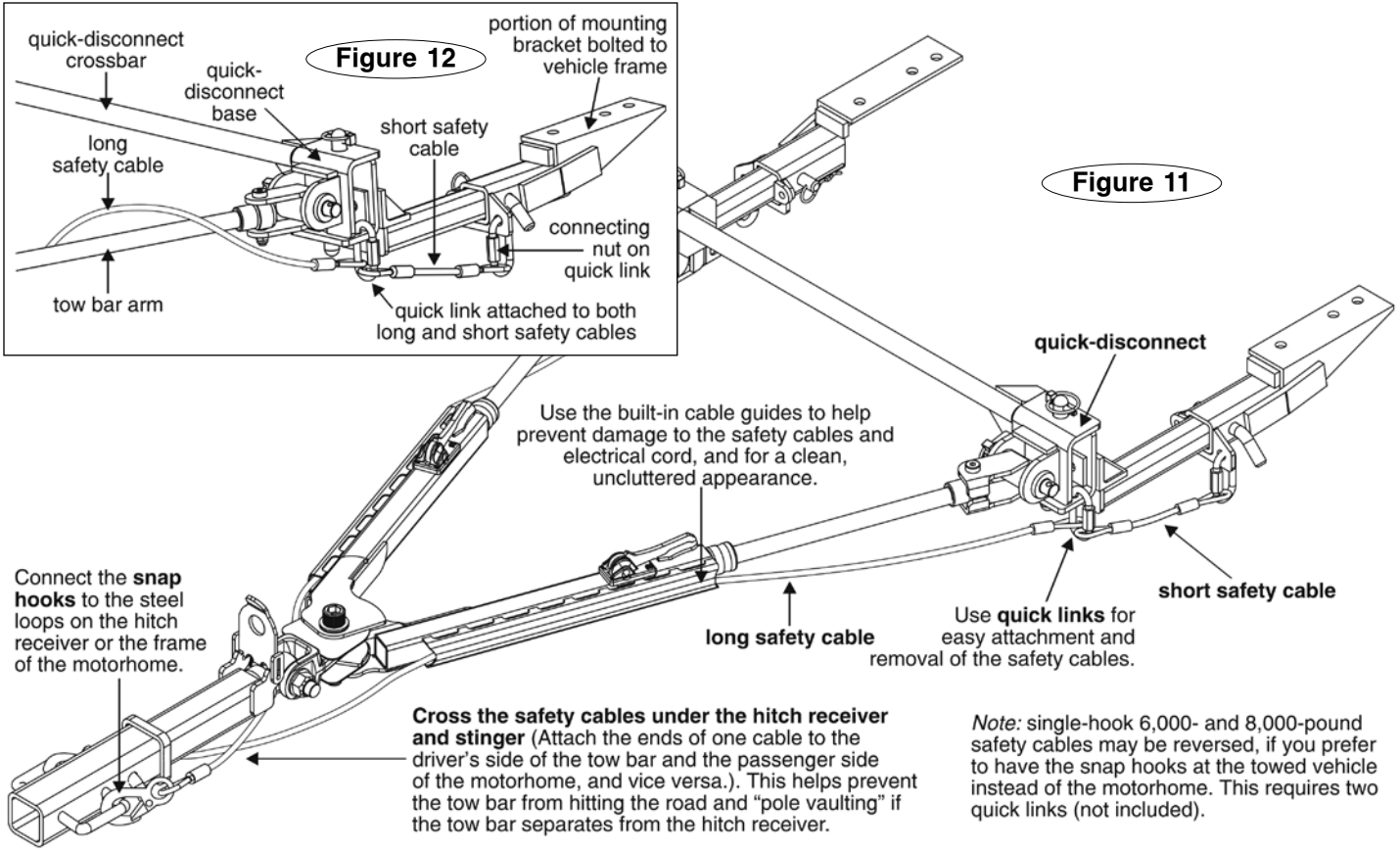
Figure 12
quick-disconnect crossbar
quick-disconnect base
long safety cable
tow bar arm
short safety cable
portion of mounting bracket bolted to vehicle frame
connecting nut on quick link
quick link attached to both long and short safety cables
Figure 11
quick-disconnect
Use the built-in cable guides to help prevent damage to the safety cables and electrical cord, and for a clean, uncluttered appearance.
Connect the **snap hooks** to the steel loops on the hitch receiver or the frame of the motorhome.
long safety cable
short safety cable
Use **quick links** for easy attachment and removal of the safety cables.
Cross the safety cables under the hitch receiver and stinger (Attach the ends of one cable to the driver's side of the tow bar and the passenger side of the motorhome, and vice versa.). This helps prevent the tow bar from hitting the road and "pole vaulting" if the tow bar separates from the hitch receiver.
Note: single-hook 6,000- and 8,000-pound safety cables may be reversed, if you prefer to have the snap hooks at the towed vehicle instead of the motorhome. This requires two quick links (not included).

Stay within the 'Safe Zone'

Towing with a motorhome-mounted tow bar which has an upward or downward slope puts undue strain on the entire towing system. For that reason, **do not tow if the tow bar is not within the 'Safe Zone' – no more than three inches above or below level**.

Towing a vehicle with a tow bar that is not within the Safe Zone will result in significant wear and tear on the tow bar and brackets, significant wear and tear on the vehicle's suspension and frame, and the eventual failure of the towing system.

To determine if the tow bar is within the Safe Zone – first, connect the motorhome and vehicle on level ground.

Next, measure the distance from the center of the motorhome receiver down to the ground. Then, measure the distance from the center of one of the base pins down to the ground. Compare these two measurements. To be within the Safe Zone, they cannot be more than three inches apart if the base pin is above or below the motorhome hitch receiver.

If the tow bar is not within the Safe Zone, you must purchase a hitch accessory to raise or lower the hitch receiver. ROADMASTER has three accessories available – Hi-Low Hitches, Hi-Low Drops and Dual Hitch Receivers – which will raise or lower the hitch receiver from two to 10 inches, depending on the model.

Towing with the tow bar more than three inches above or below level will void the ROADMASTER warranty.

⚠ WARNING

Failure to follow these instructions may cause property damage, personal injury or even death.

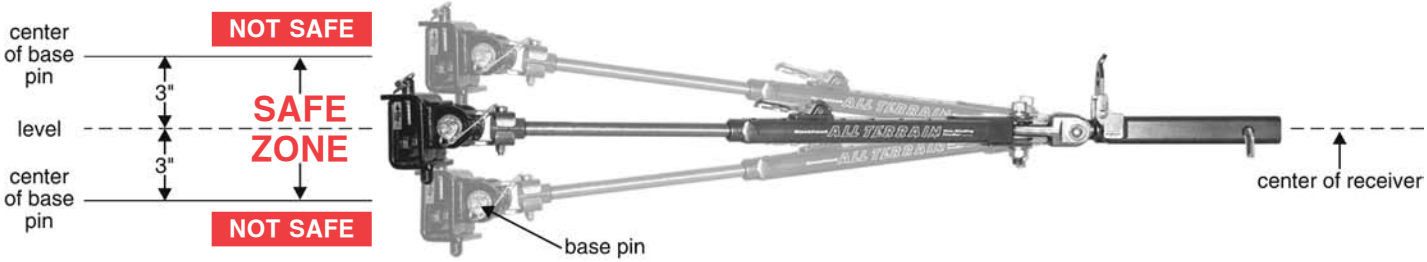

Care and cleaning

As is the case with most precision equipment, frequent cleaning and care results in better performance and longevity. Use the following guidelines to keep your tow bar clean and well-lubricated.

Always clean the tow bar before lubricating. Use a water-soluble cleaner such as Voom RV (part number 9911, shown below) – it does an exceptional job of breaking down road film, dirt and grease.

With one tow bar arm raised, spray a liberal amount of cleaner at the top of the inner/outer arm assembly (Figure 14). Then flex the tow bar arm up and down to flush dirt and debris out the bottom of the assembly. Repeat, if necessary, until the arm is clean.

Repeat for the other arm.

CAUTION

Do not use petroleum-based products to clean or lubricate the tow bar. Petroleum will attract dirt and dust, which will impede the operation of the sliding arms and/or other components. Certain petroleum products may also corrode non-metallic components.

Damage caused by using a petroleum-based product to clean or lubricate the tow bar is not covered under warranty.

After cleaning the tow bar, wipe any remaining cleaner away.

Now that you have a clean, dry tow bar, use a dry silicone aerosol, such as LubeMaster (part number 747, shown below), to lubricate the tow bar – spray a liberal amount of the silicone into all moving parts. LubeMaster sprays on wet, then dries in 30 seconds. After the lubricant has dried, flex the tow bar components, to work the lubricant in.

continued on next page

Voom RV cleaner and degreaser (part number 9911)

LubeMaster silicone spray (part number 747) – meets Volatile Organic Compound (VOC) standards

Care and cleaning

continued from preceding page

To lubricate the locking mechanisms, first clean the moving parts with a water-soluble cleaner, wipe away the excess until the mechanisms are clean and dry, then spray silicone lubricant inside (Figure 15). After the lubricant has dried, move the release handles up and down to work the lubricant in.

CAUTION

Always clean the locking mechanisms, as described above, before lubricating them. Silicone coats and covers in a thin layer. If it is not removed, it will reduce the clearance for the locking mechanisms, preventing proper operation.

Extended storage – before storing your tow bar for an extended period of time, be sure to clean and lubricate it as above. Store the tow bar in its cover, to protect it from the elements.

Note: to remove scratches and restore luster on the stainless steel arms, we suggest that you use extra fine (0000) steel wool, 3M "Scotch Brite" (fine pad) or a similar product.

Figure 14

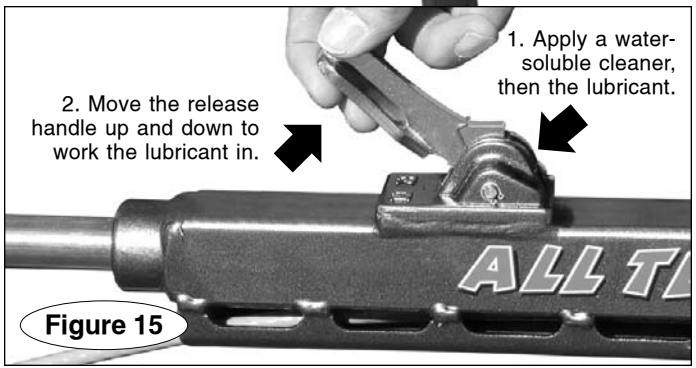

Figure 15

Limited Warranty

1. **WARRANTY**

1a. **WARRANTY OF CONFORMITY AT TIME OF SALE**

ROADMASTER, Inc. warrants that at the time of sale of this product it will be free from defects in material and manufacture and will conform to ROADMASTER'S specifications for the product.

1b. **CONDITIONAL ONE-YEAR WARRANTY**

In addition to the preceding time-of-sale warranty, if the product registration card is completely and accurately filled out and mailed to ROADMASTER within thirty (30) days of purchase, ROADMASTER will provide an additional warranty that for a period of one year after sale the product will remain in good working order, PROVIDED THAT the product is installed and maintained in accordance with ROADMASTER'S instructions and is not subjected to: (a) alteration or unauthorized repairs or repairs by anyone other than ROADMASTER or a ROADMASTER-authorized service center, (b) misuse, abuse, commercial use, or improper maintenance, (c) Acts of God (including without limitation hurricanes, tornadoes, floods, or other severe weather or natural phenomena), (d) failures due to products not supplied by ROADMASTER, or (e) other treatments, uses, or installations for which the product was not intended. This warranty extends only to the first retail purchaser-consumer of the product and is not transferable.

EXTENDED WARRANTY PERIOD: If ROADMASTER receives the product registration card, completely and accurately filled out, within twenty (20) days of purchase, ROADMASTER will enlarge the one-year warranty period in the preceding paragraph to a period of two years.

2. **DISCLAIMER OF OTHER WARRANTIES**

The preceding warranties are the exclusive and sole express warranties given by ROADMASTER. They supersede any prior, contrary or additional representations, whether oral or written. No agent, representative, dealer or employee has the authority to alter or increase the obligations or limitations of this warranty. Any implied warranties, including the WARRANTY OF MERCHANTABILITY and any WARRANTY OF FITNESS FOR A PARTICULAR PURPOSE, are limited in duration to thirty days or the term of the applicable express warranty provided above, whichever is longer.

Some states do not allow limitations on how long an implied warranty lasts, so the above limitation may not apply to you.

3. **EXCLUSIVE REMEDY FOR ANY NONCONFORMITIES**

If during the applicable Warranty Period, the product does not conform to the preceding Warranties, notify ROADMASTER as provided below, and within a reasonable time ROADMASTER will provide, at its option, one of the following: (1) replacement components for any nonconforming or defective product or components or (2) the percentage of the purchase price for the nonconforming product equal to the percentage of the Warranty Period remaining when ROADMASTER is notified of the nonconformity. ROADMASTER will, at its option, (a) use new and/or reconditioned parts in performing warranty repairs and making replacement products, (b) use parts or products of original or improved design in the repair or replacement. If ROADMASTER repairs or replaces a product, its warranty continues for the remaining portion of the original Warranty Period or 60 days from the date of the return shipment to the customer, whichever is greater. All replaced products and all parts removed from repaired products become the property

continued on next page

Limited Warranty

continued from preceding page

of ROADMASTER. ROADMASTER will not provide, and will not be liable for, labor, costs of removal or reinstallation of components, disposal, shipping, freight, taxes, or other incidental charges.

THESE REMEDIES ARE THE EXCLUSIVE AND SOLE REMEDIES FOR ANY BREACH OF WARRANTY.

For any breach of warranty, the Owner must telephone ROADMASTER at 1-800-669-9690 within thirty (30) days after discovering the nonconformity. Do not return any product without first calling ROADMASTER and getting a return authorization number. Returned products must include the return authorization number and a copy of the original invoice, bill or other proof of the date of purchase. The date of purchase must coincide with the original warranty registration card on file. ROADMASTER will authorize (a) shipment of the product to ROADMASTER or (b) repair or replacement at the nearest warranty service center–in both cases with shipping at your expense. Do not purchase replacement parts or pay for repair labor–you will not be reimbursed. Compliance with the requirements of this paragraph is a condition to coverage under the Warranty: if these requirements are not complied with, ROADMASTER will have no obligation to provide any remedy for any breach of warranty.

4. **DISCLAIMER OF INCIDENTAL AND CONSEQUENTIAL DAMAGES**

IN NO EVENT SHALL ROADMASTER BE LIABLE FOR ANY INCIDENTAL, SPECIAL, INDIRECT OR CONSEQUENTIAL DAMAGES, WHETHER RESULTING FROM NONDELIVERY OR FROM THE USE, MISUSE OR INABILITY TO USE THE PRODUCT OR FROM DEFECTS IN THE PRODUCT.

Some states do not allow the exclusion or limitation of incidental or consequential damages, so the above limitation may not apply to you.

5. **APPLICABLE LAW**

This Warranty will be interpreted, construed, and enforced in all respects in accordance with the laws of the State of Washington, without reference to its choice of law rules. The U.N. Convention on Contracts for the International Sale of Goods will not apply to this Warranty.

6. **SEVERABILITY**

If any provision of this warranty is found to be invalid or unenforceable, then the remainder shall have full force and effect, and the invalid provision shall be partially enforced to the maximum extent permitted by law to effectuate the purpose of the agreement.

7. **ADDRESS FOR NOTICES TO ROADMASTER**

ROADMASTER, Inc., 6110 NE 127th Ave., Vancouver, WA 98682.

This warranty gives you specific legal rights, and you may also have other rights which vary from State to State.

10,000-pound capacity

BlackHawk™ ALL TERRAIN 2

Patent Pending

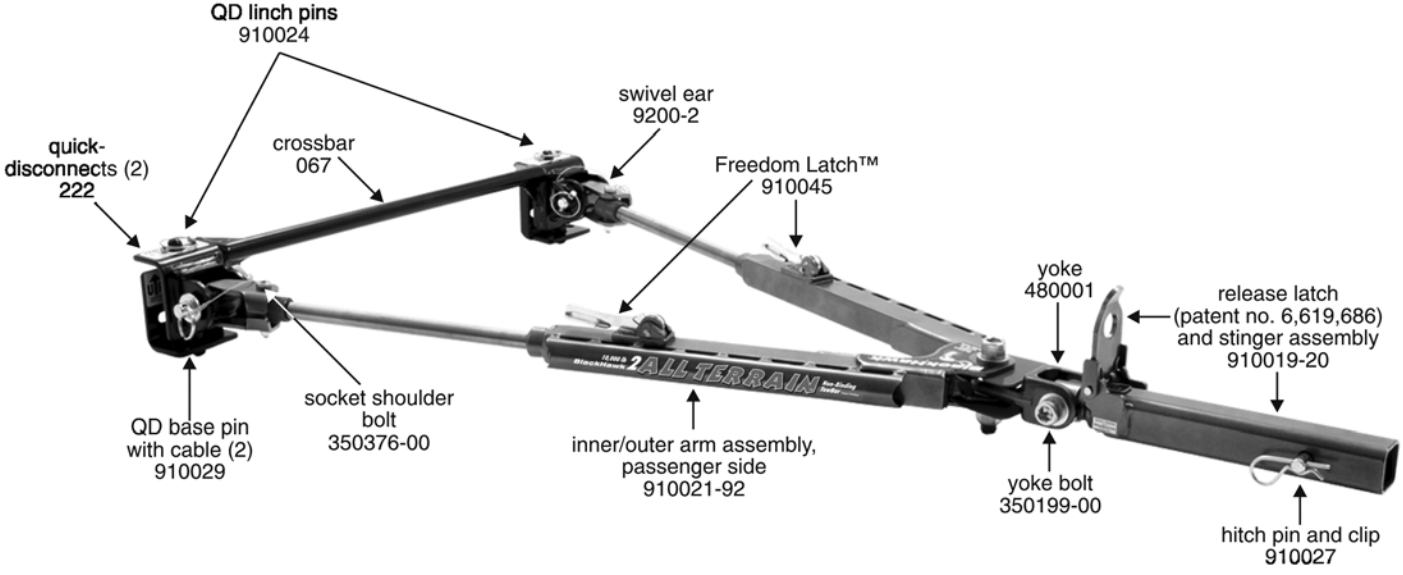

— ADVERTISEMENT —

A ‘Wow!’ difference in RV control…

A remarkable improvement in stability and cornering control – for motorhomes or any large vehicle, especially towing combinations – is just a few bolts away. Anti-sway bars from Roadmaster Suspension Solutions deliver a “Wow!” difference in RV control you’ll notice the first time you turn the wheel.

- **20 years of experience** in the RV industry
- for **motorhomes, trucks, vans** and **SUVs**
- more than 60 kits, each one **custom-designed** for a specific chassis and suspension system
- large diameter, cadmium-plated **4140 chromoly steel bars**, with heavy-duty **polyurethane bushings**
- **easy installation** – in most cases, eight bolts
- **Each kit comes complete** with heavy-gauge mounting hardware, easy-to-follow instructions, and the bushing lubricant.
- **website product locator** finds the kit for your chassis – visit www.roadmasterinc.com; select ‘Products,’ then ‘Roadmaster Suspension Solutions,’ then ‘Anti-Sway Bars,’ then ‘Search for anti-sway bars by vehicle.’

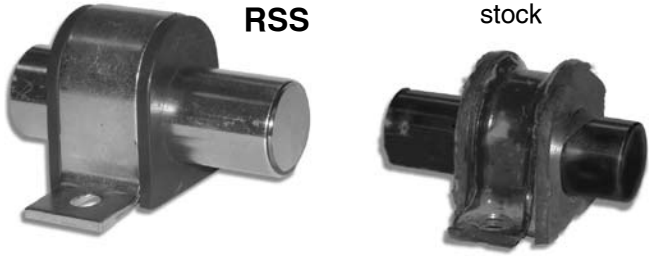

A HIGH-GRADE ALLOY AND A BETTER PIVOT POINT *– The stock anti-sway bar (on the right) has a small diameter, 1020 grade spring steel, and a rubber bushing. The RSS anti-sway bar (to the left) has a large diameter, 4140 chromoly steel, and a polyurethane bushing, making it many times more resistant to sway.*

ROADMASTER
SUSPENSION SOLUTIONS

For more information on RSS anti-sway bars…
…call ROADMASTER (800-669-9690), or visit www.roadmasterinc.com.

— ADVERTISEMENT —

Why fight it?

Driving your truck or RV should be an enjoyable experience. And it can be. Adding a set of RSS anti-sway bars to your suspension has an immediate effect on stability and cornering control (especially with towing combinations) – the vehicle stays level, even through the turns.

An RSS bar anchors the frame to the axle, so that the pressure shifts caused by crosswinds or cornering are virtually eliminated. The anti-sway bar does all the fighting – instead of you – so even after hours at the wheel, you arrive fresh, instead of fatigued.

So what are you waiting for? It's time to relax, and enjoy the ride.

RSS anti-sway bar benefits –
• Improved handling • Increased stability
• Smoother ride • Reduced body roll • Combats cross-winds • Corner with confidence • Less driver fatigue
• Improvement over factory standard equipment

ROADMASTER
SUSPENSION SOLUTIONS

For more information on RSS anti-sway bars…
…call ROADMASTER (800-669-9690), or visit www.roadmasterinc.com.

"We get your towed car there,
while stopping safely along the way."

All illustrations and specifications contained herein are based on the latest information available at the time of publication. ROADMASTER, Inc. reserves the right to make changes, at any time, without notice, in material, specifications and models, or to discontinue models.

ROADMASTER

Towing and Suspension Solutions

ROADMASTER, Inc. • 6110 NE 127th Ave. • Vancouver, WA 98682 • 800-669-9690 • fax 360-735-9300 • www.roadmasterinc.com
© 2009 ROADMASTER, Inc. All Rights Reserved 85-3328-03 06/2009