Brake-Lite Relay

part number 88400

Installation Instructions

252701-06 10-09

All specifications are subject to change without notice.

ROADMASTER, Inc. 6110 NE 127th Ave. Vancouver, WA 98682 800-669-9690 Fax: 360-735-9300 www.roadmasterinc.com

Purpose of the Brake-Lite Relay kit – Depending on how the towed vehicle is wired for brake lights and turn signals, its brake signal may override the turn signal from the motorhome. If this is the case, the brake lights will not illuminate in conjunction with the motorhome's, which is required by law.

The Brake-Lite Relay allows current to flow to the brake lights only if the vehicle is actually running. So the brake signal cannot override the motorhome's turn signals while it is being towed.

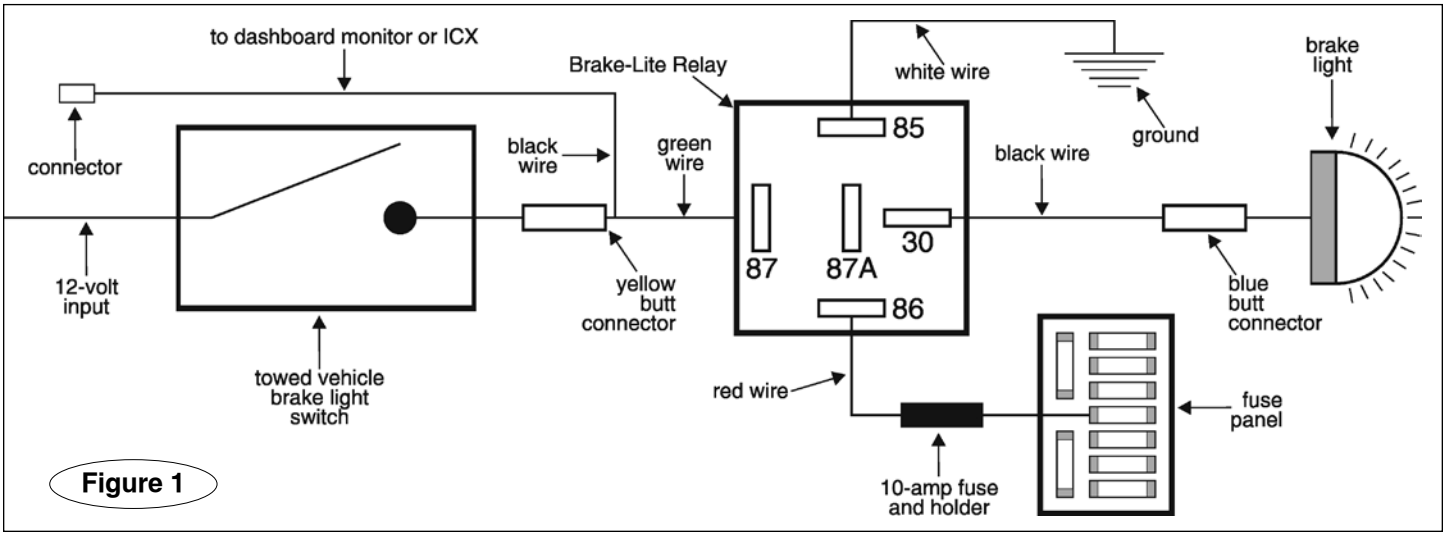

Figure 1

CAUTION

Do not install the Brake-Lite Relay in any Ford vehicle with a "neutral tow" kit. Using the Brake-Lite Relay in these vehicles may prevent disengagement of the transmission for towing, causing severe non-warranty transmission damage.

1. Locate the towed vehicle's brake light switch and, with a test light, find the "cold" side of the brake light switch. (The "cold" side of the switch does not register voltage unless the brakes are applied.) Then, **remove the vehicle's brake light fuse**, located in the **vehicle's** fuse panel.

CAUTION

Failure to remove the brake light fuse from the vehicle's fuse panel may cause the vehicle's theft deterrent system, or other electrical system indicators, to be activated if the brake pedal is depressed during the installation. This may require non-warranty repair to the vehicle.

2. Cut the "cold" side of the brake light wire, a few inches downstream from the brake light switch.

3. Install the Brake-Lite Relay in line, as shown in Figure 1 – first, attach the motorhome monitor wire, as well as the green wire from the Brake-Lite Relay, to one end of the supplied yellow butt connector.

4. Next, attach one end of the brake light wire (Figure 1) to the other end of the yellow butt connector.

CAUTION

Attach the wire that will be connected to either the dashboard monitor or the ICX transmitter to the brake light wire between the brake light switch and the Brake-Lite Relay. Connecting the motorhome monitor wire after the Brake-Lite Relay will prevent the monitor light from illuminating.

5. Using the included blue butt connector, attach the black wire from the Brake-Lite Relay to the other end of the brake light wire (Figure 1).

6. Attach the included 10-amp fuse to the red wire from the Brake-Lite Relay (Figure 1). Then, using the included fuse tap (Figure 2) and spade connector, attach the red wire to the "hot" side of any fuse which is powered only

continued on next page

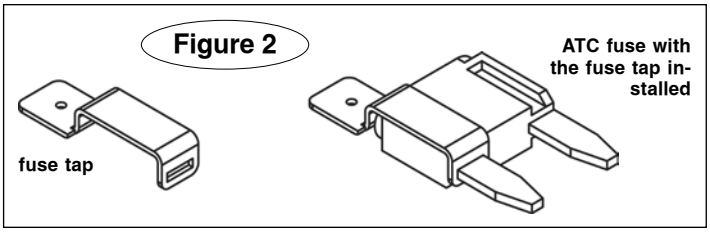

Figure 2

continued from preceding page
when the towed vehicle's ignition is turned on.

⚠ CAUTION

In order to prevent damage from a short circuit, the 10-amp fuse must be within six inches of the electrical connection. If the 10-amp fuse is farther than six inches, a short circuit may cause significant damage to the towed vehicle's electrical system, an electrical fire, or other consequential, non-warranty damage.

Note: the "hot" side of the socket is the one that registers voltage when the fuse is pulled, the ignition switch is on, and the tester is connected between the socket and ground.

7. Connect the white wire from the Brake-Lite Relay to any good chassis ground.

8. Secure the Brake-Lite Relay in place, using the included wire ties.

Ensure that the wiring will not present an obstacle or hazard to the driver of the vehicle, or interfere with the operation of the vehicle. Use one or more of the included wire ties, if necessary, to secure the wiring out of the way.

9. Reinstall the brake light fuse, which you removed in step 1.

10. Test to ensure that the Brake-Lite Relay has been properly installed:

- When the towed vehicle's engine is running, the brake lights function normally.
- When the towed vehicle's ignition key is in the "tow" position, the brake lights do not function.

ROADMASTER

Towing and Suspension Solutions

ROADMASTER, Inc. • 6110 N.E. 127th Ave. • Vancouver, WA 98682 • 800-669-9690
Fax: 360-735-9300 • www.roadmasterinc.com